APIX3 Converter II



Flexible video converter for DisplayPort to APIX3 conversion

The APIX3 Converter II enables the display of video signals from a DisplayPort source on APIX3 compatible displays. Image, touch and control data can be transferred.

By integrating driver functions, a complex control device can be simulated. With the APIX3 Converter II, a large test station setup is no longer necessary to operate an APIX3-compatible display. Instead, a computer connected to the converter, for example, can display image content on the display and be controlled by touch input. In addition, the latest generation with H-MTD® connector supports DSC (Display Stream Compression) and Daisy-Chaining. Thus, several displays can be controlled simultaneously with one converter only. The APIX3 Converter II is therefore ideally suited for presentations, use in seating boxes and demonstrators, for testing or development purposes (for example UI design).

The APIX3 Converter II thus provides support in early development phases, reducing costs for test setups and saving valuable development time. The converter can be parameterized using an API in JSON format and our APIX Converter Tool (ACT). Therefore, it can be integrated into any test environment.

Key Features

- Easy setup of test environment for development and validation purposes
- Flexible firmware and GUI
- Video-, control- and touch-data
- Supports DisplayPort input sources
- DSC (Display Stream Compression) Tunneling – pass through of already compressed data-stream
- Out-of-Band signalling (OOB)
- Daisy-Chaining of multiple Displays
- Easy change of display configuration via APIX Converter Tool (ACT) or SD-card
- Display of test images without external video source
- Usage of the APIX3 display as HID (Human Interface Device) via USB-C
- Supports GDCN

Block diagram

Video data is forwarded to an APIX3-compatible display via a DisplayPort signal. Via the Ethernet interface, commands can be sent to the converter and the display.

Touch information can be exchanged via Ethernet and USB-C (Human Interface Device).

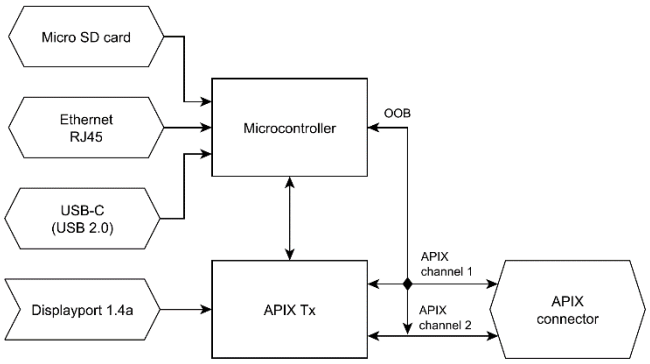



Example of use*

The APIX3 Converter II can forward the video data from a standard PC to an APIX3-compatible display via the DisplayPort connector.

Via Multi-Stream-Transport (DisplayPort) and Daisy-chaining (APIX), multiple displays can be controlled at the same time.

*only exemplary. Real setup depends on display capabilites.

Technical data

Power supply	
Supply voltage	12 V DC (8V to max. 15.4V)
Power consumption (excluding display)	3.6 W
Connector	2.0 * 5.5 mm barrel plug and Standard 4mm safety plug
Inputs / Outputs	
APIX H-MTD®	APIX3
DisplayPort	DisplayPort 1.4a
Ethernet	10 / 100 Mbps
USB	USB-C 2.0
MicroSD	Micro SD cards with FAT32 (ExFat or NTFS not supported)
Physical specifications	
Dimensions	84 * 105 * 49 mm [length * width * height]
Weight	0.25 kg
Environmental specifications	
Operating temperature	-5 to +50 °C

Front panel

- 12V-supply voltage
    - Barrel plug
    - Standard 4mm safety plug
- H-MTD® APIX3 interface



Back panel

- Standard DisplayPort interface
- Standard RJ45 Ethernet interface
- Standard USB-C 2.0 interface
- Standard MicroSD-card slot



APIX3-interface

- Fully compatible with APIX3
- H-MTD® connector
- Coding: Z – Waterblue

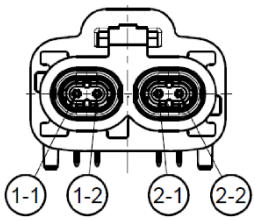

Pin number	Designation
1-1	TX data 0 P
1-2	TX data 0 N
2-1	TX data 1 P
2-2	TX data 1 N

Power connectors

- Standard 4mm safety lab plug
- Barrel plug 2,0 mm * 5,5 mm

Pin number	Designation
Red	Supply DC +
Black	GND

Feature overview

Below is an overview of the most important features of the APIX3 Converter II. Basic features are available for all purchased converters. All other features need to be requested and purchased separately.



Domain	Features	Converter II	Converter II R	Basic feature
HW	HSD® connector		✓	✓
	H-MTD® connector	✓		✓
	Out-of-Band signaling (OOB)	✓		✓
SYS	Daisy-Chaining	✓		✓
	DSC tunneling	✓		✓
	Video over DisplayPort	✓	✓	✓
	Touch HID forwarding over USB-C	✓	✓	✓
	Touch data over ETH	✓	✓	✓
	Reaction time measurement (touch input)	✓		
SW	GUI: APIX Converter Tool (ACT)	✓	✓	✓
	Testpatterns via INAP[1]	✓	✓	✓
	Testpatterns via display chip	✓	✓	✓
	Touch visualizer	✓	✓	✓
	GDCN[2]	✓		✓
	API	✓	✓	✓
	Display firmware update	✓		
	Create and load display configuration via ACT	✓		✓
	Load display configuration via SD-card	✓	✓	✓
	Backlight dimming	✓	✓	✓
	Logging via TCP/IP	✓	✓	✓
	SPI commands	✓	✓	
	JSON commands	✓	✓	
	APIX3 Converter II firmware update	✓	✓	✓

[1]only for non-DSC displays

[2]only for customers authorized by BMW

Optional accessories

Cable H-MTD® Y

- Dual connector to 2 single connectors (2 lanes)
- 2m, other lengths on request
- Optimized for APIX3 data rate

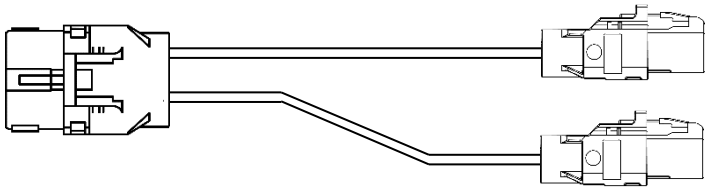

Cable H-MTD® Single

- Dual connector to 1 single connector (1 lane)
- 2m, other lengths on request
- Optimized for APIX3 data rate

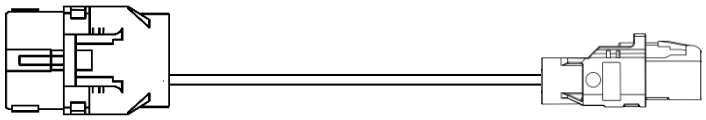

Cable H-MTD® Dual

- Dual connector to dual connector (1 lane)
- 2m, other lengths on request
- Optimized for APIX3 data rate

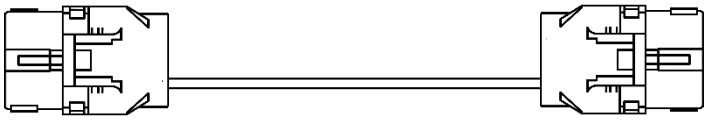

Cable H-MTD® Dual-DC

- Dual connector to 3 dual connectors (1 lane; Daisy-Chained)
- 3x2m
- Optimized for APIX3 data rate

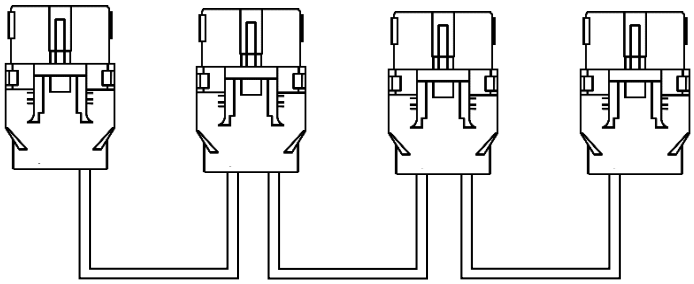

Cable H-MTD® customized

- Customized cable configurations on request

Optional accessories

LINUX DSC PC

- Linux powered Mini-PC as video source
- Modified to work with DSC
- More details on request

Power supply

- 12 V power supply

Display configuration

- Custom configuration file for different display types
- Individual configuration necessary for each display type
- Other or specialized configuration possible on request

Customized Features

- Custoized features can be implemented on request